PowerBox Systems

World Leaders in RC
Power Supply Systems

EFI System

Instruction Manual and Datasheet

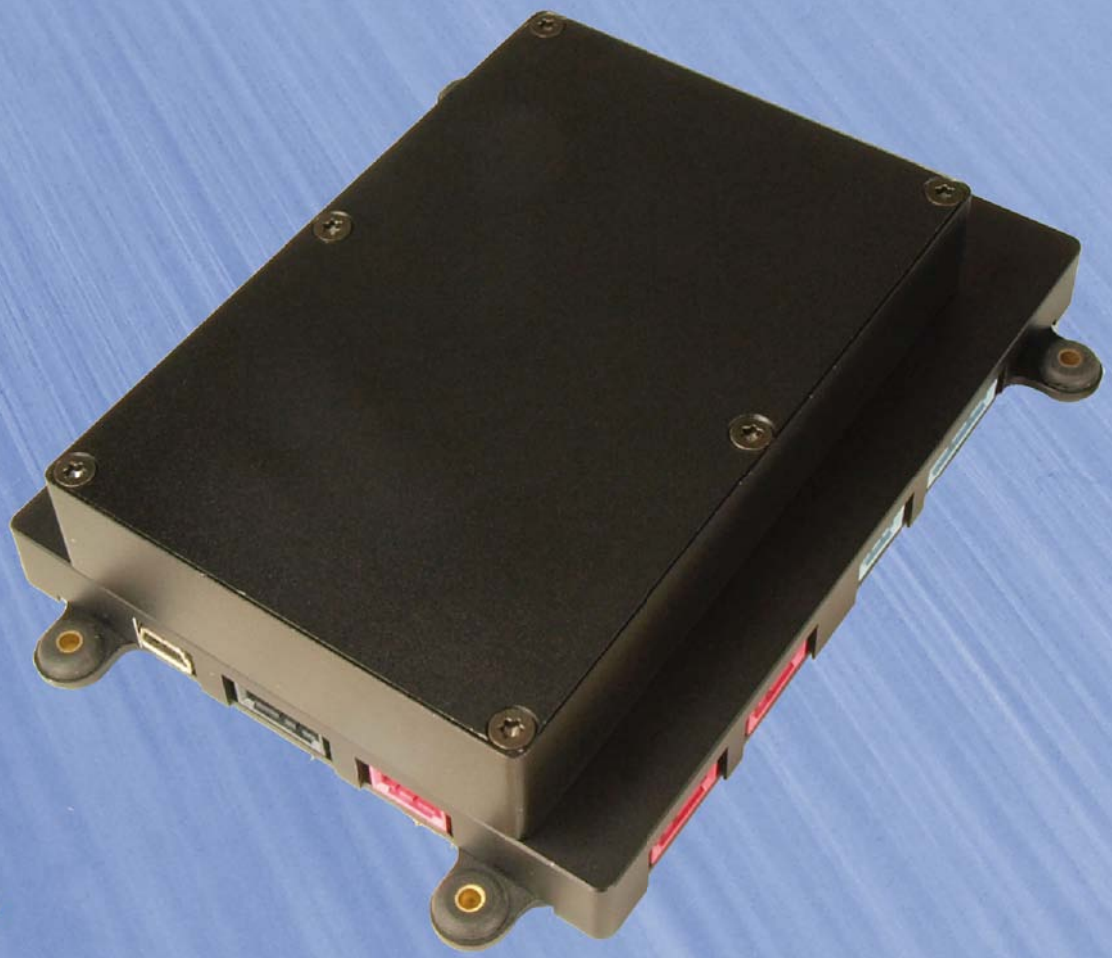

The **PowerBox** electronic fuel injection system has been designed to allow any two-stroke engine - regardless of capacity - to be adapted to fuel injection with little effort. The only aspects which have to be matched to the individual engine are the size of the "throttle body" and the injector jet. A simple, clearly arranged PC program is used to set up the electronic injector system to suit the engine. In just a few minutes the engine can be set up in such a way that it runs, and from that point on several functions are available for fine-tuning. These functions are also used to set up automatic fuel mixture adjustment to cater for variations in external influences such as temperature and air pressure. A conventional UART interface is employed for later implementation of the power unit in the UAV, which is designed with transmission security as top priority.
Supplementary features include an air flap control system for engine cooling, a facility to install a redundant pump system, and the option of controlling two separate injector jets independently of each other. The system also incorporates a "fail-safe" function in case the rpm sensor should fail.

Contents:

1. Functions:

- Simple to adapt to existing engine systems
- USB or UART interface
- Integral bootloader function – software updates can be implemented on-site
- Supports two ignition units
- Hall element fail-safe function
- Can be used with two fuel pumps to reduce the risk of mechanical component failure
- Eleven mixture adjustment points over the full rotational speed range
- Overheating guard function
- Acceleration / richening / leaning function
- Fuel mixture adjustment according to air pressure
- Fuel mixture adjustment according to ambient temperature
- Electronic fuel pressure regulation
- Storage of mechanical throttle servo settings
- Integral speed governor
- Four cylinder head temperature measurement points
- External ambient temperature sensor
- Integral air pressure sensor
- Active cylinder head temperature governor
- Servo position feedback
- Calibration function for temperature sensor and air pressure sensor

2. Sensor measurement points:

- Power supply voltage
- Overall current drain
- Current drain, pump(s)
- Current drain, servos
- Current drain, 2 x ignition
- Rotational speed
- Air pressure
- Fuel pressure
- 4 x cylinder head temperature
- Ambient temperature
- Fuel pump duty cycle
- 2 x current injector times
- 2 x servo feedback voltage for throttle flap and cooling air flap

3. Electrical connections – without Erni front end:

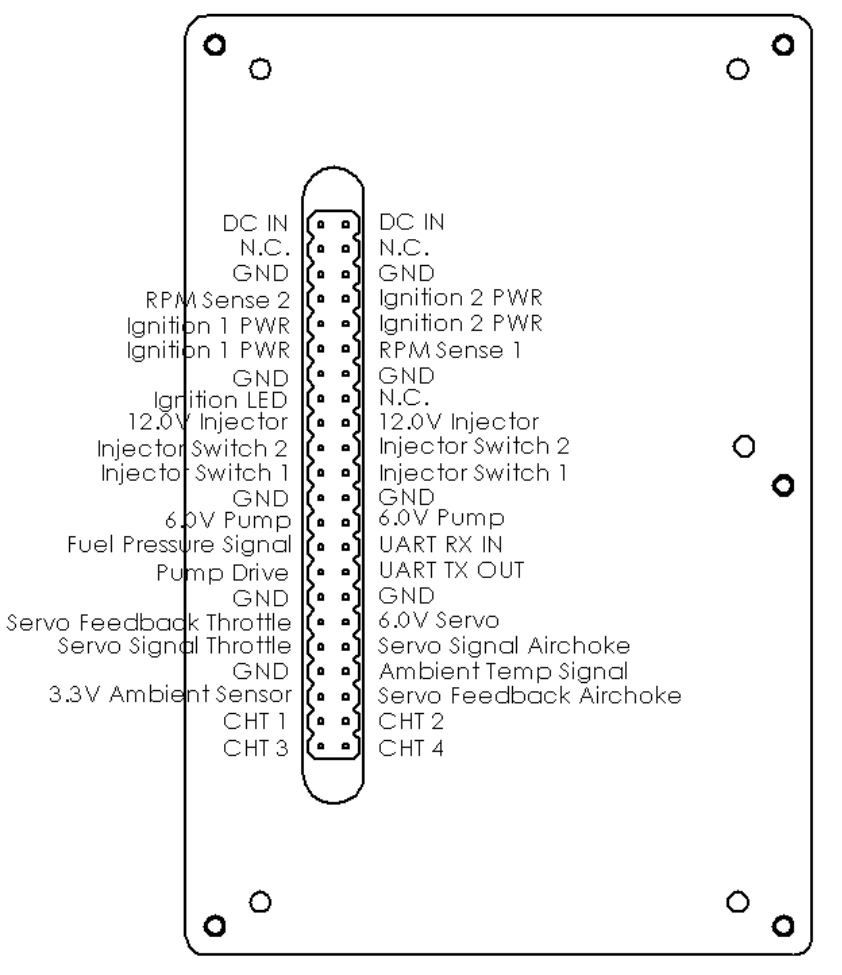

PIN	Direction	Type
Cylinder head sensor 1 - 4	Input	Analogue
Temperature sensor, 3.3 V	Output	DC
Servo feedback, throttle	Input	Analogue
Ambient temperature signal	Input	Analogue
Servo signal , throttle	Output	PWM
Servo +6 V	Output	DC
Pump drive	Output	Open Drain
Fuel pressure signal	Input	PWM
Pump +6 V	Output	DC
UART TX OUT	Output	UART 3.3 V
UART RX IN	Input	UART 3.3 V
Injector switch, 1 - 2	Output	Open Drain
Injector +12 V	Output	DC
Ignition LED	Output	DC
Ignition power supply 1 - 2	Output	DC
RPM trigger	Input	Open Gate
DC input	Input	DC

4. Electrical connections - with Erni front end:

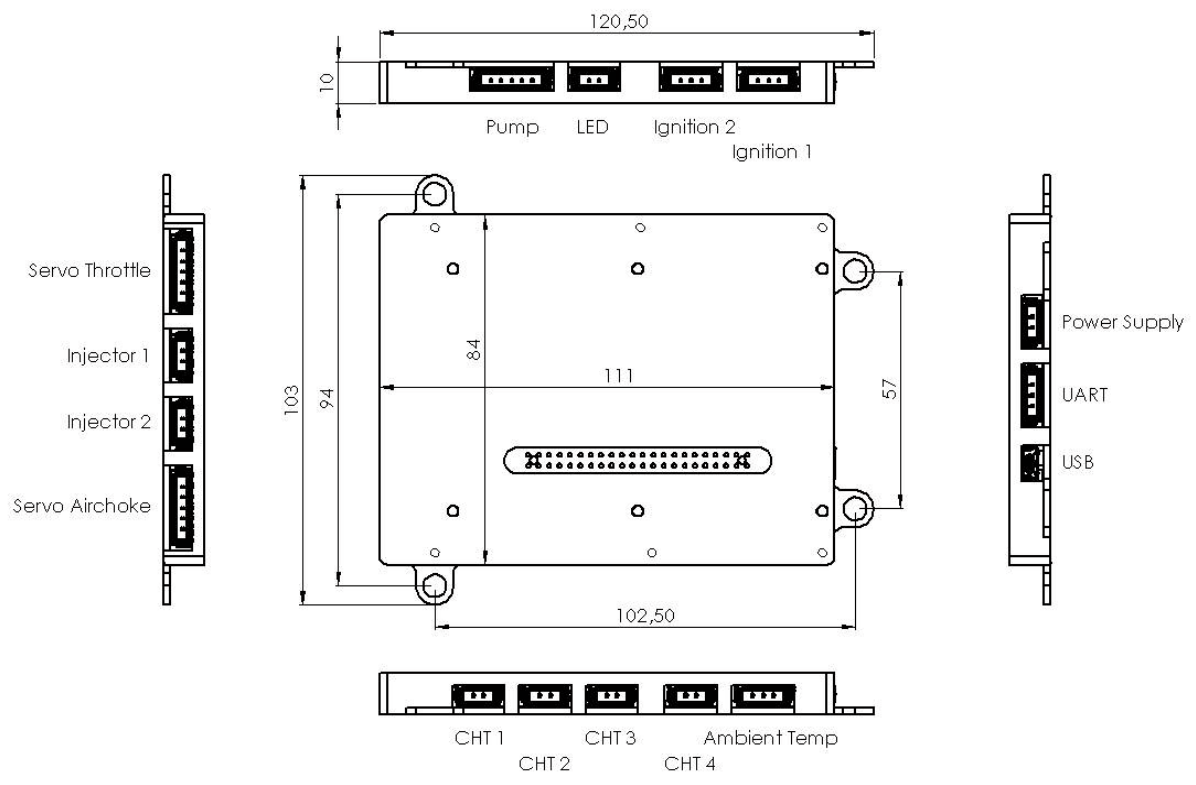

5. Installing the fueltank system, the electrical connections and the PC program

These instructions assume that the power system is set up correctly in mechanical terms. That means: the propeller, throttle body and injector are already installed.
Complete the fuel line connections as shown in the diagram below:

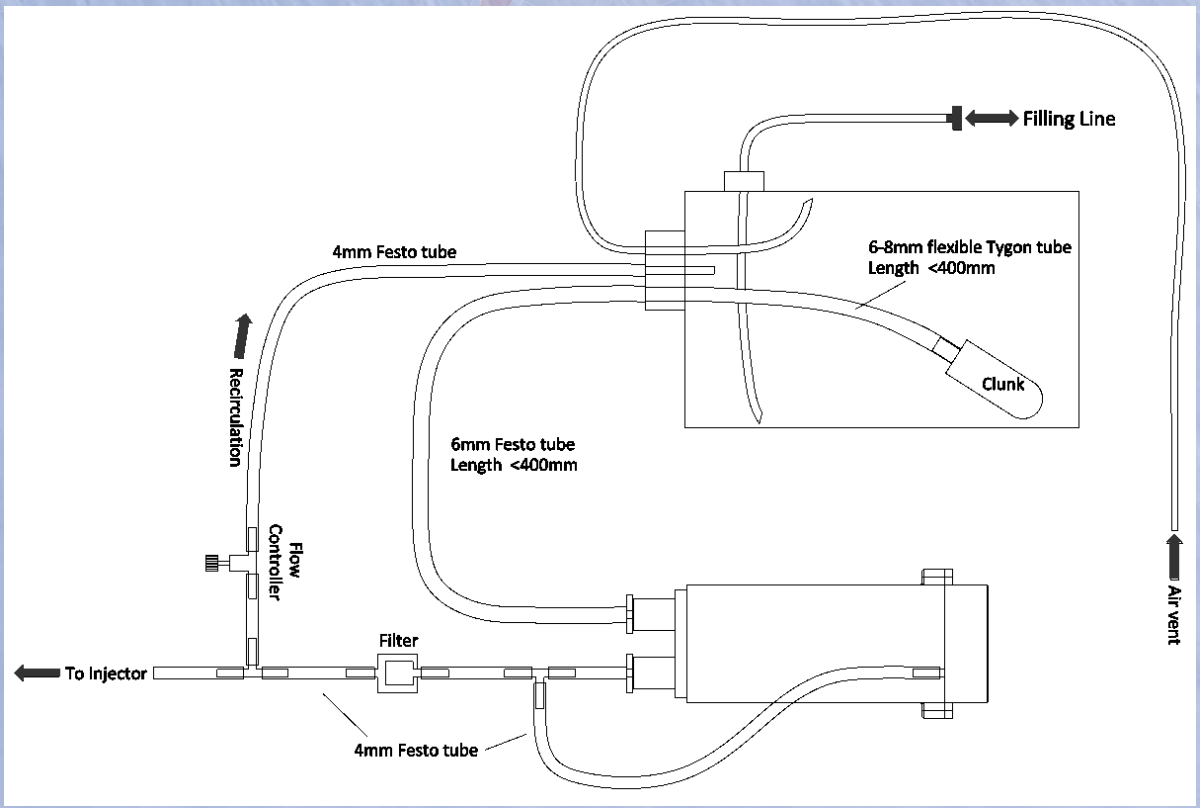

Important: when you have installed the fueltank system, the next step must be to open the flow control valve completely by turning the adjuster screw fully to the left!
We do not recommend the use of a sintered fuel filter. Experience has shown that sintered filters may shed tiny metal particles; these will cause the pump to stop immediately.

The electrical connections can be completed once the fueltank system has been connected. If you are using the Erni front end the installation could hardly be simpler: the plugs on the connecting leads are colour-coded, and cannot be inserted in the wrong socket.
The next essential step is to install the **MotorControl** program on a Windows PC or laptop. The program is Java-based, and therefore works on all computers running Windows. It is important to download the latest version from our server, to ensure that the range of functions is not restricted. Please contact us by e-mail for the Link to the Download area. The **MotorControl** program is an EXE file which self-installs when you click on it: follow the on-screen instructions. After the installation you will find these two icons on the desktop:

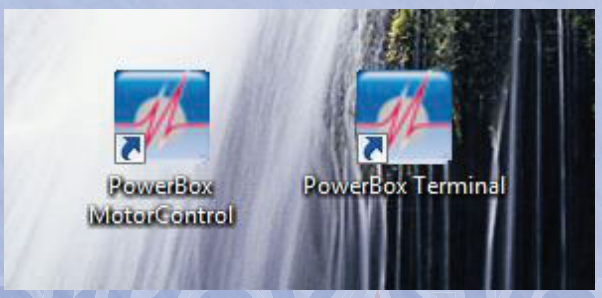

MotorControl is the actual program; **PowerBox Terminal** is only required if you need to install an ECU software update.

6. Using the system for the first time

Connect the ECU to a mains PSU or battery, taking care to maintain **correct polarity**. Connect the ECU to the PC using the USB lead. Wait a moment for the driver to install itself, and you will then see a message at bottom right on your PC screen, informing you that the COM port is now available.
Click on the ***PowerBox MotorControl*** icon: a window entitled "Connect ECU" now appears. Click on the ***Connect*** button, and the program automatically locates the COM port in use by the ECU.

Note: if you are using a different UART converter instead of the ERNI front end, click once on ***Connect***: select the correct COM port in the window which now appears, and confirm your choice by clicking twice on ***Connect***.

This window now appears:

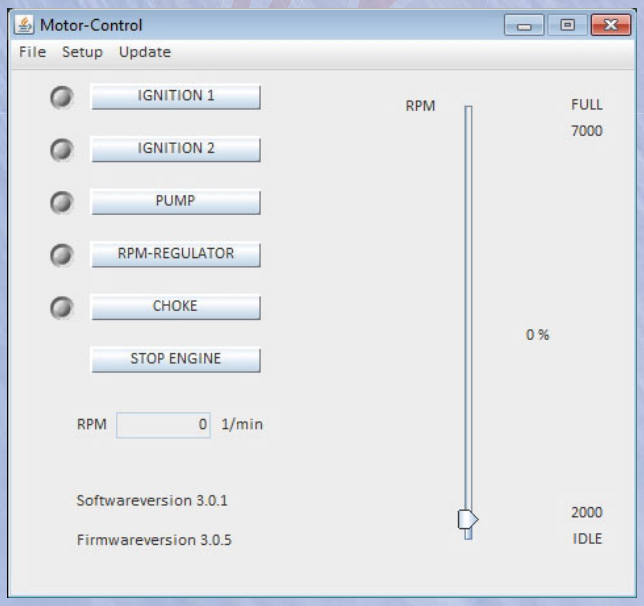

At bottom left you will see the software version of the **MotorControl** program, and the ECU firmware version.

6a) Setting up the fuel pump

The first essential step is to set the pump performance: this is accomplished by selecting the Setup tab, and opening the two windows ***Engine Status*** and ***Special***:

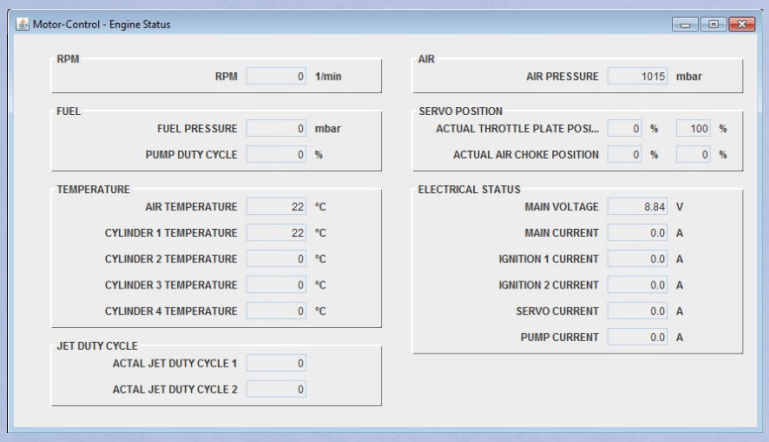

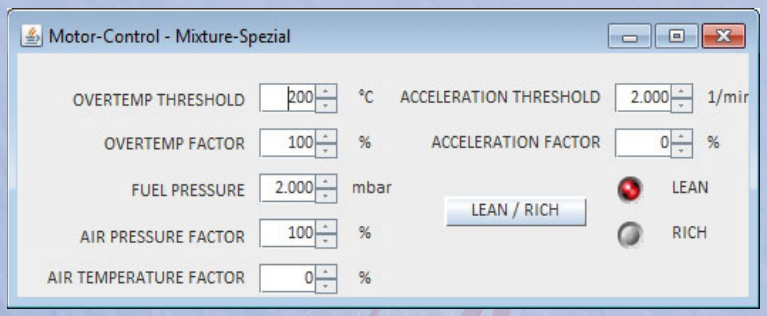

The flow control valve is fully open, the fueltank system has been filled. Set the desired fuel pressure in the ***Special*** window, then switch on the pump in the main window: the pump starts running, and the ***Pump Duty Cycle*** is displayed in the ***Engine Status*** window. This will be at 100%, since there is no back-pressure acting on the pump, and the electronic regulation system is set to maximum flow.

Drehen Sie jetzt das Drosselventil langsam soweit zu bis sich der Pump Duty Cycle Wert bei 30-35% einpendelt. Sie können deutlich hören wie die Pumpendrehzahl sinkt. Der Fuel Pressure Wert im Engine Status Fenster pendelt – mit leichten Schwankungen - um den von Ihnen vorgegebenen Wert.

Now **slowly** rotate the flow control valve to the point where the value for ***Pump Duty Cycle*** settles at around 30 - 35%; you will clearly hear the decline in the pump's rotational speed. The ***Fuel Pressure*** value in the ***Engine Status*** window now settles – with minor fluctuations - at or around the value you have selected.

6b) Calibrating the sensors

The sensors have to be calibrated once. The procedure can only be carried out when all the sensors are in a stable state. This means that you should not attempt to calibrate the sensors after the system changes from a cold to a warm state. For the same reason the engine should not have been run immediately before the procedure is carried out.
We recommend that you calibrate the sensors using a standard commercial weather station, which should display temperature and air pressure.

Open the ***Calibrate*** window in the drop-down menu:

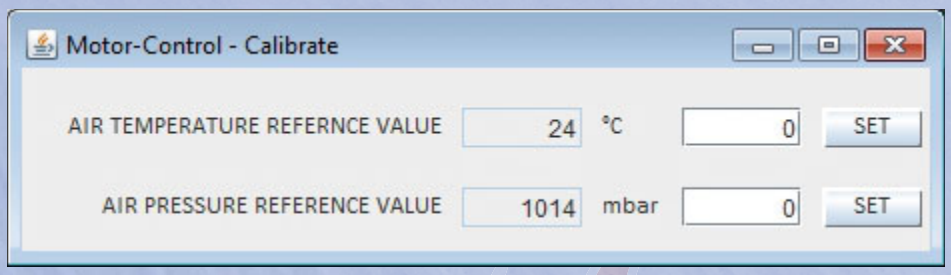

Enter the current temperature value in the right-hand window, then press ***SET***. Repeat the procedure for air pressure. In the ***Engine Status*** display you can now see the calibrated values for the temperature sensors connected to the system. The offset is stored permanently in the ECU.

6c) Setting the throttle servo end-points

The system must be taught the mechanical limits of the throttle servo and the (optional) cooling air flap servo. To avoid damage, do not connect the two servos at this point. Open the ***Throttle Flap*** window:

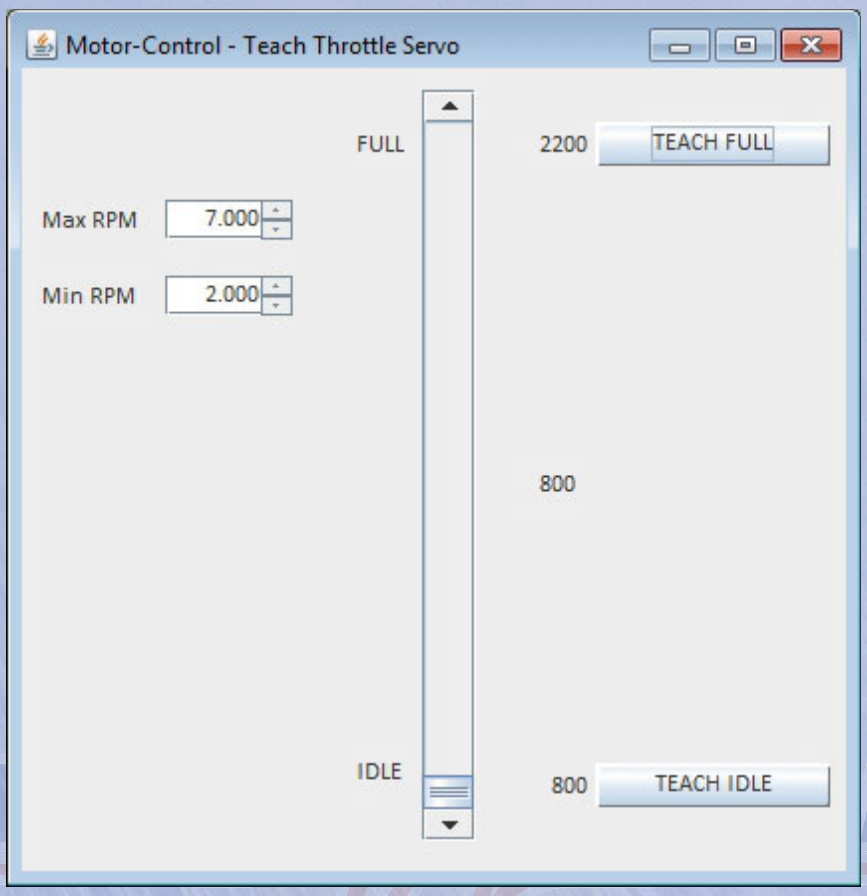

Move the slider to centre, then connect the throttle servo to the ECU. Move the slider to the full-throttle position, and click on ***TEACH FULL***. Now move the slider to the idle position and click on ***TEACH IDLE***. It does not matter whether the slider position for idle is 'up' or 'down'.
If necessary, the idle position can be fine-tuned with the system in operation. To avoid the engine stopping when the window is opened, always use this procedure **before** you start the engine: open the ***Throttle Flap*** window and move the slider to centre, then bring the main window to the foreground again before starting the engine. When the engine is running, you can switch to the ***Throttle Flap*** window and fine-tune the idle setting. When you are confident that the idle setting is correct, click on ***TEACH IDLE***.
The maximum and minimum rotational speeds must now be entered to ensure that the speed regulation system works properly. Enter the appropriate rpm values at ***MAX RPM*** and ***MIN RPM*** as stated by the engine manufacturer.

6d) Setting the cooling air flap end-points

The method of teaching the system the travel of the air flap servo in the ***Air Flap*** window is exactly as described for the throttle servo.

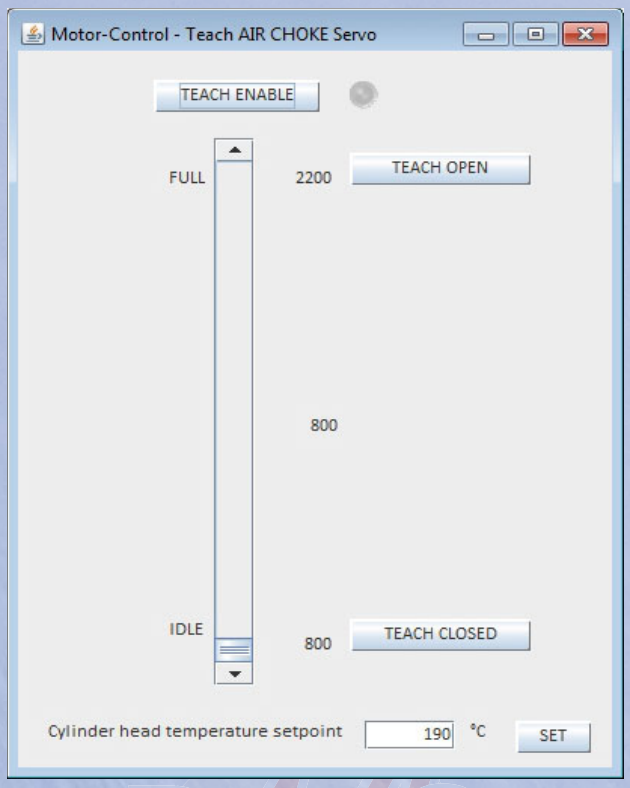

The regulation system must be disabled by activating the ***TEACH ENABLE*** button before the air flap servo travel can be set.
Enter the nominal temperature value for the cylinder heads at ***Cylinder head temperature setpoint***.

7. Starting the engine for the first time

Open the ***Mixture*** window: by default all the values are set to 2500. If the injector jet has been selected correctly for the engine, an initial attempt to start the engine can be made using these values. If the values are a long way out, you will very quickly discover the error when you try to start the engine.

Switch the pump on for the first start. Press the ***Choke*** function once or twice: this opens the injector for half a second. Whenever the red light next to Choke is on, the mixture is 10% richer than normal; this promotes better starting. The light goes out automatically as soon as the engine's cylinder head temperature reaches 100°C.

Set the throttle flap to 20%. You will see that the pointer in the lower part of the Mixture window follows its movement; this pointer indicates to you the exact position of the throttle flap. If you wish to make the fuel mixture richer or leaner, use the ***Throttle/RPM*** slider to move the pointer in the main window to your preferred position.

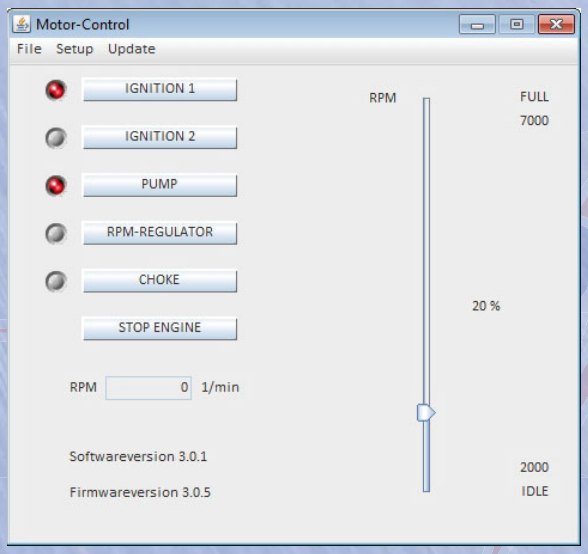

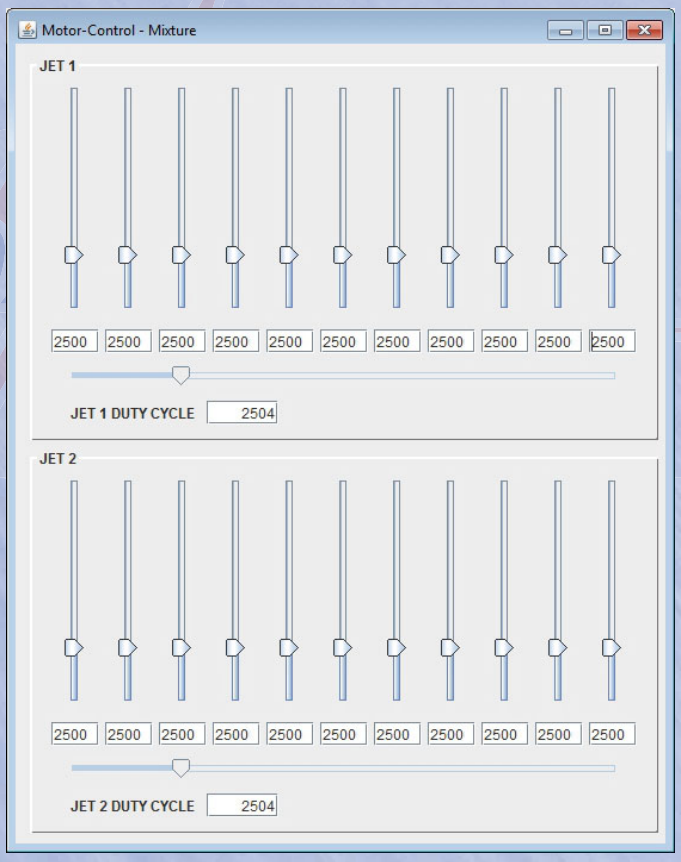

Switch the ignition on and attempt to start the engine. If it starts and stops again, the mixture is probably too lean. Locate the third slider from the left in the ***Mixture*** window, raise it to 1000, and carry out another attempt to start the engine. Make adjustments in small increments until the engine runs reliably at 20%. Now set all the other ***Mixture*** sliders to the same level in order to create a basis for the whole rpm range. In our experience the slider settings rise gradually from the 50% point.

Once the engine is set up over the full rpm range, you can move on to the ***Mixture Special*** settings.

8. Electrical specification:

Input voltage range:	12 - 35 V
Max. current 6 V:	10 A (for pump(s), servo, ignition units)
Max. current, 12 V (injector jet):	5 A
Max. current, ignition (2 x):	3 A
Max. servo current (total):	3 A
Max. pump current:	7 A

9. Mechanical specification:

Weight, Erni front end:	107 g
Weight, ECU:	120 g
Weight, pump:	152 g

Dimensions, ECU:

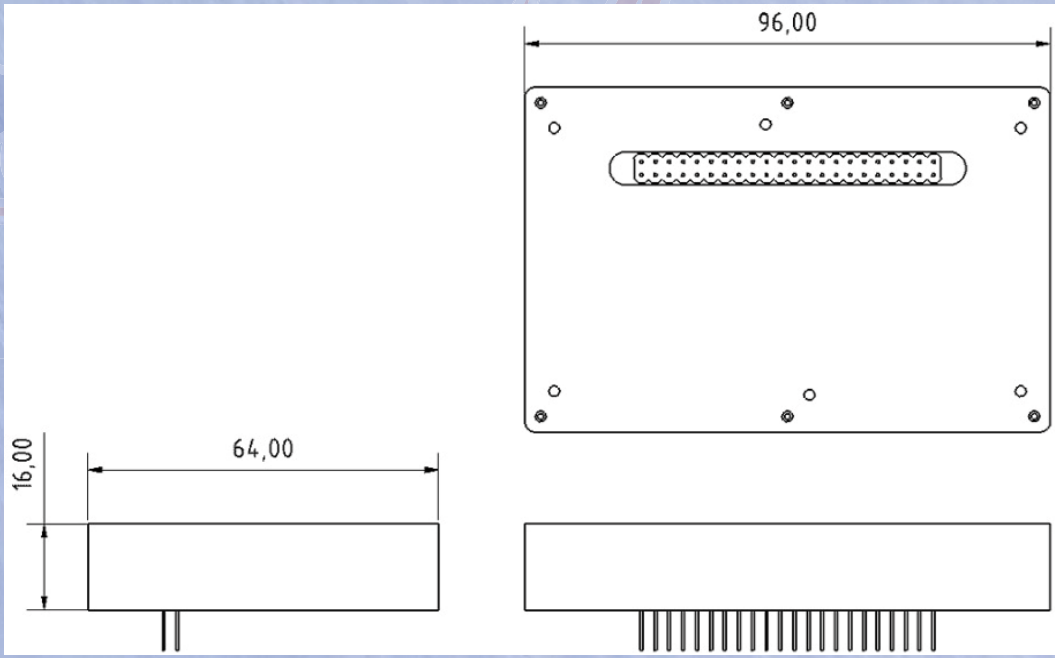

Dimensions, Erni front end:

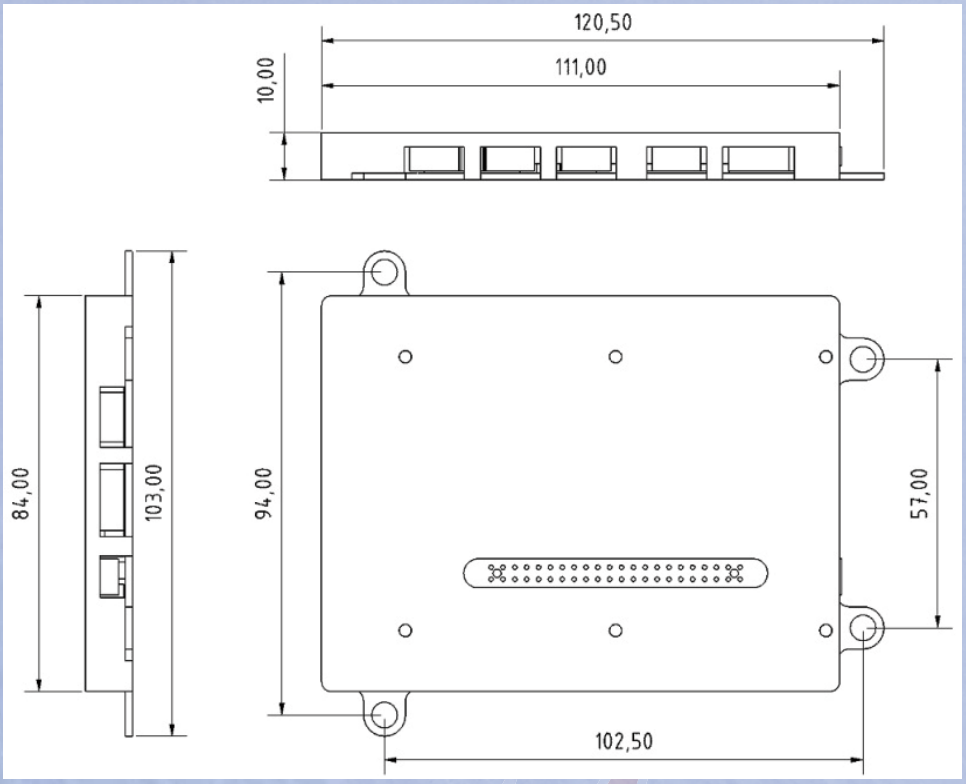

Dimensions, pump:

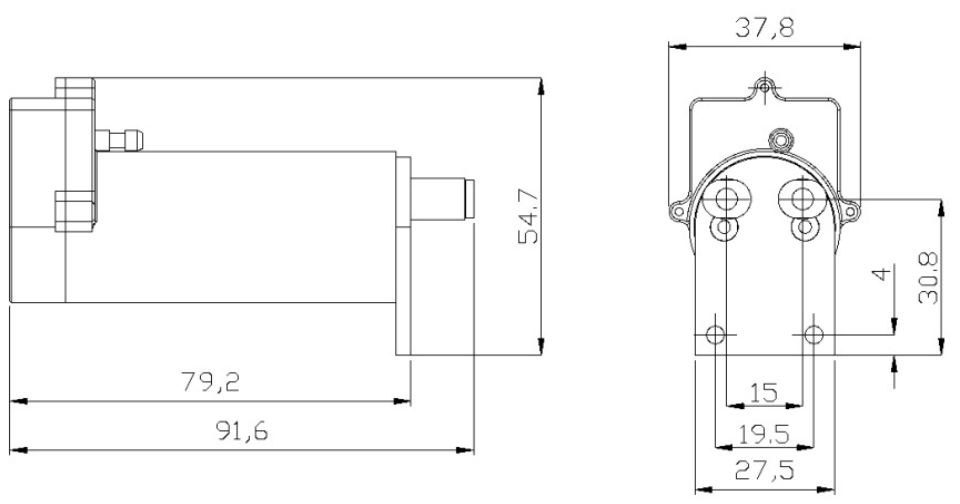

10. Liability exclusion:

We are not in a position to ensure that you observe our instructions regarding installation of the **EFI System**, or fulfil the recommended conditions when using the unit.

For this reason we deny liability for loss, damage or costs which arise due to the use or operation of the **EFI System**, or which are connected with such use in any way. Regardless of the legal arguments em-ployed, our obligation to pay damages is limited to the invoice total of our products which were involved in the event, insofar as this is deemed legally permissible.

Donauwörth, October 2014

PowerBox Systems

PowerBox-Systems GmbH
certificated according to DIN EN ISO 9001:2008
Ludwig-Auer-Straße 5
D-86609 Donauwörth
Germany

Tel: +49-906-22 55 9
Fax: +49-906-22 45 9
info@PowerBox-Systems.com

www.PowerBox-Systems.com